STATIC GAS OVEN СТАТИЧЕСКАЯ

Regolamento (UE) 2016/426 del 9 Marzo 2016

Regulation (UE) 2016/426 of 9 March 2016

FLAME 4 - FLAME 6 - FLAME 6L - FLAME 9

EN Instruction, use and maintenance manual
(Translation of the original instructions)

EN Translation of the original instructions

These instructions are only valid if the country code appears on the appliance. If the code does not appear on the appliance, refer to the technical instructions for adapting the appliance to the conditions for use in that country.

Categoria / Category:

II2H3+

Tipo di installazione / Type of installation:

FLAME 4: A1 - B11 - B21
Flame 6-6L-9: B11 - B21

TABLE OF CONTENTS

1. PREMISE 82
1.1 SYMBOLS 82
1.2 INTENDED USE 83
1.3 MANUAL PURPOSE AND CONTENT 84
1.4 STORING THE MANUAL 84
1.5 UPDATING THE MANUAL 84
1.6 OVERVIEW 84
1.7 MAIN REGULATIONS AND DIRECTIVES THAT ARE RESPECTED AND MUST BE RESPECTED 85
1.8 LEGAL GUARANTEE .....
1.9 MANUFACTURER'S LIABILITY 86
1.10 USER CHARACTERISTICS 86
1.11 TECHNICAL SUPPORT .....
1.12 SPARE PARTS 86
1.13 IDENTIFICATION PLATE 87
1.14 OVEN DELIVERY 88
2. SAFETY WARNINGS 88
2.1 WARNINGS FOR THE INSTALLER 88
2.2 WARNINGS FOR THE USER 89
2.3 WARNINGS FOR THE MAINTENANCE TECHNICIAN 90
3. GENERAL SPECIFICATIONS 91
3.1 Features 91
3.2 Technical data 91
3.3 Wiring diagrams 93
4. HANDLING AND TRANSPORT 96
5. PREPARING THE INSTALLATION SITE 96
5.1 SAFETY PRECAUTIONS 96
5.2 OVEN INSTALLATION SITE 97
6. INSTALLATION (chapter for the installer technician) 97
6.1 POSITIONING THE OVEN 97
6.2 CONNECTION TO THE UTILITIES 97
6.2.1 Electrical connection 97
6.2.1.1 Earth connection 98
6.2.3 Connection to the chimney and flue 98
6.2.4 Checking the supply pressure and heat input 104
6.2.5 Converting to another type of gas 108
7. COMMISSIONING AND USING THE OVEN 111
7.1 DIAGRAM OF THE CONTROL PANEL 111
7.2 SWITCHING ON THE OVEN FOR THE FIRST TIME 112
7.3 START-UP PHASE 112
7.4 GENERAL COOKING INSTRUCTIONS 112

7.5 PIZZA MAKER TIPS 112
7.6 WORK PHASES 113
7.7 SWITCH-OFF PHASE 113
8. MAINTENANCE AND CLEANING 113
8.1 SAFETY PRECAUTIONS 113
8.2 ROUTINE MAINTENANCE TO BE PERFORMED BY THE USER 114
8.2.1 Cleaning the refractory surface of the cooking chamber 114
8.2.2 Externally cleaning the oven 114
8.3 UNPLANNED MAINTENANCE TO BE PERFORMED BY TECHNICIANS 114
9. ALARMS AND POSSIBLE ANOMALIES 115
10. INFORMATION FOR DEMOLITION AND DISPOSAL 116

1. PREMISE

Dear Customer, first we would like to thank you for choosing our product and congratulate you on your choice.
To allow you to make the most of your new oven, please follow the instructions in this manual carefully.
The ovens referred to in this manual have been exclusively designed to cook pizzas and similar products.
The above-mentioned intended use and the configurations envisaged for these appliances are the only ones allowed by the Manufacturer: do not use the appliance in a manner that is inconsistent with the instructions provided.
The installation must be carried out exclusively by qualified personnel, able to guarantee the best operating and safety conditions.

1.1 SYMBOLS

Points of considerable importance are highlighted by the following symbols in this manual:

☞	**INSTRUCTION**: Instructions concerning the correct use of the product and the responsibilities of the persons in charge.
!	**WARNING**: A point where a particularly important aspect is expressed.
m	**DANGER**: An important behavioural aspect is expressed in order to prevent injury or property damage.

SAFETY WARNINGS

Before using or maintaining the equipment, read this manual carefully.

• The manual must always accompany the product throughout its life, even in the event of transfer. In case of loss, ask the retailer and/or the manufacturer for a copy (indicating the serial number).

• The rating plate provides important technical information. They are essential in the event of a request for intervention for maintenance or repair of the equipment: it is therefore recommended not to remove, damage or modify it

• This type of appliance is intended to be used for commercial applications, for example restaurant kitchens, canteens, hospitals and commercial enterprises such as bakeries, butchers etc., but is not intended for continuous mass production of food.

• This appliance is not intended for use by inexperienced people in domestic and similar applications.

• This type of appliance is not suitable for use by people (including children) with reduced physical, sensory or mental capabilities or a lack of experience and knowledge.

• All installation, assembly and extraordinary maintenance operations must be carried out exclusively by specialized and qualified personnel according to the regulations in force in the country of use and respecting the regulations relating to systems and workplace safety.

• Before any movement or installation of the equipment, make sure the suitability of the room that will house it. Check that the systems comply with the regulations in force in the country of use and with what is stated on the rating plate. Installation, use or maintenance other than that indicated in this manual may cause damage, injury or death.

• WARNING: This appliance must not be installed where the public has access.

• If this appliance must be positioned near walls, partitions, kitchen furniture, decorative finishes, etc., these must be made of non-combustible material or covered with suitable certified heat-insulating material.

• During assembly of the equipment, transit or permanence is not permitted
of people not involved in installation near the work area.

• Before carrying out any maintenance, component replacement or ordinary/extraordinary cleaning, disconnect the equipment from the electrical power supply.

• Interventions, tampering or modifications not expressly authorized which do not comply with what is stated in this manual may cause damage, injuries or fatal accidents and will void the warranty.

• Some parts of the equipment can reach high temperatures. It is advisable to be careful not to touch the surfaces and not to bring near materials that may be flammable or sensitive to heat, not even when handling cooked food.

• Do not place any object, especially if made of heat-sensitive material, on top of the oven.

• FIRE HAZARD: leave the area around the equipment free and clean of combustibles. Do not keep flammable materials near this equipment.

• WARNING, DANGER OF EXPLOSION: it is forbidden to use the oven in environments at risk of explosion.

• ATTENTION: it is forbidden to insert flammable solids or liquids, for example alcohol, into the cooking chamber during operation.
To handle food during and after cooking, always use personal protection devices (e.g. gloves) to avoid the risk of burns.

• When cooking, always use materials that are not sensitive to heat and certified for contact with hot foods.

• Always use heat-resistant tools (e.g. steel). Plastic or similar kitchen utensils may not withstand high oven temperatures.

• Supervise the appliance throughout its operation, do not leave food in the oven unattended.

• Avoid leaving the appliance unattended in the presence of children and make sure that they do not use it or play with it.

• WARNING: always turn off the main electrical switch when you have finished using the equipment and before carrying out maintenance operations.

• If you notice any anomaly, malfunction or failure, do not use the equipment, contact the dealer and/or a qualified and specialized technician. If it is necessary to replace components of the product, always request original spare parts under penalty of invalidation of the Warranty.
• Place emergency telephone numbers in a visible place.

• The equipment must be checked by a qualified and specialized technician at least once a year.

• Failure to comply, even partially, with these rules can cause damage and injury, including moral injury, voids the warranty and relieves the Manufacturer of any liability.

• To clean the equipment or any of its components, accessories or substructure DO NOT use:
- abrasive or powdery, aggressive or corrosive detergents (e.g. hydrochloric/muriatic or sulfuric acid, caustic soda, etc.)
- abrasive or sharp tools (e.g. abrasive sponges, scrapers, steel brushes, etc.);
- steam or pressure water jets.

1.2 INTENDED USE

The oven were designed and constructed exclusively for use in food sectors, for preparing and to cook pizzas and similar products .
The intended use described above and the machine configurations are the only uses authorized by the Manufacturer: ***do not use the machine in any way that does not adhere to the provided instructions***.

m	**DANGER**: An important behavioural aspect is expressed in order to prevent injury or property damage.

1.3 MANUAL PURPOSE AND CONTENT

Purpose:
The purpose of this manual is to allow the user to operate the machine in compliance with all regulations and to make use of the necessary materials for correct, safe and long-term use.

Content:
This manual contains all necessary information for installation, use and maintenance of the machine.
Scrupulous adherence to the information contained in this manual guarantees high safety and productivity levels of the machine.

1.4 STORING THE MANUAL

Conservation of the manual
This manual, which is an integral part of the product, must be carefully preserved and must always be available for consultation, both by the user and by those responsible for installation and maintenance.

Deterioration or loss
If necessary, request a further copy from your dealer or the manufacturer.

Transfer of the equipment
In the event of transfer of the product, the user is obliged to also hand over this manual to the new owner.

1.5 UPDATING THE MANUAL

This manual reflects the state of the art of the product at the moment the product is released on the market.
The equipment that is already available on the market, with the relative technical documentation, will not be considered incomplete or inappropriate due to possible subsequent modifications, adjustments or application of new technologies on newly marketed machines.
The information in this manual only applies for models in the II2H3+ category and that are used in Italy. If used in another European country with a different category, the manual must be translated with the references (setup for the gas and local installation regulations) for the country of destination. The data plate on each appliance indicates the codes for the European countries where the appliance may be sold and installed.

1.6 OVERVIEW

Information:
If exchanging information with the equipment Manufacturer or the Dealer, please refer to the serial number and the identification data of the machine reported on the plate.

Liability:
With delivery of this manual, the Manufacturer declines any and all liability, both civil and criminal, for accidents deriving from partial or total non-adherence to the specifications contained herein.
The Manufacturer also declines all liability for improper or incorrect use of the equipment, for unauthorized modifications and/or repairs, as well as for use of non-original or spare parts not appropriate for these models.

m	Modifications and/or tampering with any functional part or component of the appliance may be dangerous and cause damage to people and/or property. For the reasons indicated above, it is strictly prohibited to tamper with the parts sealed by the manufacturer. The manufacturer is not responsible for the consequences resulting from improper use of the appliance. Its incorrect use invalidates the warranty with immediate effect.

Extraordinary maintenance:
Extraordinary maintenance operations must be performed by qualified personnel trained to work on the rolling machine referred to in this manual.
It is advisable to stipulate a maintenance contract which includes checks to be performed at prefixed intervals.
It is particularly desirable to control at least annually of the exhaust pipe for installation Type B11 and B21 (chimney cleaning and verification efficiency fume hoods removal).

Responsibility for installation operations:

☞	The Manufacturer shall not be responsible for the equipment installation operations. This is, and remains, the responsibility of the installer who is in charge of executing the controls related to the correctness of the proposed installation. In addition, all safety regulations foreseen by the current laws in force in the state in which the machine is installed must be respected.

Use:
In addition to the instructions contained in this manual, the use of the machine is subject to all safety regulations outlined in the specific laws in the Country where the machine is installed.

1.7 MAIN REGULATIONS AND DIRECTIVES THAT ARE RESPECTED AND MUST BE RESPECTED

- Regulation 2016/426/EU of 9 March 2016 “on appliances burning gaseous fuels and repealing Directive 2009/142/EC;
- Standards EN 203-1, EN 203-2-2 and EN 203-3 concerning “Appliances for professional gas-heated kitchens”;
- Standard EN 437: Gas test - Pressure test - Appliance categories.
- Directive 2014/35/EC “on the harmonisation of the laws of Member States relating to electrical equipment designed for use within certain voltage limits and repealing Directive 2006/95/EC”;
- Directive 2014/30/EU “on the harmonisation of the laws of Member States relating to electromagnetic compatibility and repealing Directive 2004/108/EC”;
- Directive 89/391/EEC “on the introduction of measures to encourage improvements in the safety and health of workers at work”;
- Directive 2006/42/EC “on machinery and amending Directive 95/16/EC”;
- Directive 85/374/EEC and Directive 1999/34/EC “on the approximation of the laws, regulations and administrative provisions of the Member States concerning liability for damage resulting from defective products”;
- Directive 2002/95/EC “on the restriction of the use of certain hazardous substances in electrical and electronic equipment”;
- Directives 2002/96/EC and 2003/108/EC “on waste electrical and electronic equipment (WEEE) and subsequent amendments”;
- Regulation (EC) No. 1935/2004, on materials and articles intended to come into contact with food and repealing Directives 80/590/EEC and 89/109/EEC.

1.8 MANUFACTURER'S LIABILITY

!	The manufacturer declines all civil and criminal liability, either direct or indirect, due to:

- Installation that does not conform to local currently enforced regulations and safety directives
- Failure to observe the instructions contained in this manual;
- Installation by unqualified and untrained personnel;
- Use that does not comply with safety directives;
- Machine modifications and repairs not authorized by the Manufacturer.
- Use of non-original spare parts or spare parts not specific to this model
- Lack of maintenance.
- Extraordinary events.

1.9 USER CHARACTERISTICS

The user of the oven must be an adult, responsible person with all necessary technical knowledge for the machine's ordinary maintenance, such as its daily cleaning.
Make sure to keep children and unauthorized people away from the machine while it is operating.

1.10 AFTER-SALES SERVICE

To request spare parts, contact your dealer, always referring to the data shown on the identification plate located on the side of the equipment (Model, serial number, etc.) and the spare part code shown in the spare parts exploded view.
For any request for extraordinary maintenance, repairs and/or replacement, contact exclusively the authorized dealer from whom you purchased the appliance and/or a specialized technician in possession of the technical-professional requirements required by current regulations.

1.11 SPARE PARTS

Use only original spare parts.
Do not wait until components are worn out before replacing them.
Replacing a worn component before breakage helps to prevent injuries deriving from accidents caused by unexpected component breakage, which could provoke serious damage to persons or property.

☞	***Perform the periodical maintenance controls as indicated in the chapter "MAINTENANCE AND CLEANING".***

1.12 IDENTIFICATION PLATE

The plate on the equipment contains all relevant data, including Manufacturer data, the **serial number** and the **CE** conformity to type marking.
The **CE** marking is issued by a notified body following certification tests and the surveillance activities for the product as foreseen by the regulation.
The plate also contains the data with **the gas setup, the European countries where it is sold with the relative categories and nominal pressures.**

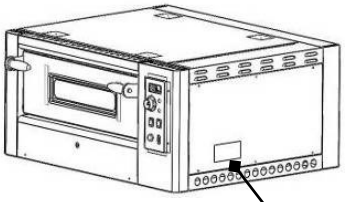

PIN N° XXXXXXXX 2018

CE 0705

G20	1,48 m³/h
G25	1,72 m³/h
G25.1	1,72 m³/h
G25.3	X,XX m³/h
G30	1,10 m³/h
G31	1,09 m³/h

S/N	XXXXXXX		☐ A1
Mod.	Flame 4	Type:	☐ B11
Anno	03/2018		☐ B21
Qn	14 kW		
220-230 V ~ 50 Hz	A max: 0,5	100 W	

		G20	G25	G25.1	G25.3	G30	G31	
AT, CH	II2H3B/P	20	/	/	/	50	50	mbar
AL, BA, BG, EE, FI, LT, LV, MK, NO, RO, SE, SI UA	II2H3B/P	20	/	/	/	28-30	28-30	mbar
CZ, ES, GR, IE, IT, PT, GB, CH, SK, TR	II2H3+	20	/	/	/	28-30	37	mbar
DE	II2ELL3B/P	20	20	/	/	50	50	mbar
NL	II2EK3B/P	20	/	/	25	28-30	28-30	mbar
HU	II2HS3B/P	25	/	25	/	28-30	28-30	mbar
PL	II2E3B/P	20	/	/	/	37	37	mbar
IS, CY, MT	I3B/P	/	/	/	/	28-30	28-30	mbar
LU, BE, FR	I3+	/	/	/	/	28-30	37	mbar
LU	I2E	20	/	/	/	/	/	mbar
BE	I2E(R)B	20	25	/	/	/	/	mbar
FR	I2Esi	20	25	/	/	/	/	mbar

3+ G30/G31 28-30/37 mbar

If the Gas type configuration is changed, replace this wording, using the adhesive labels supplied by the manufacturer.

The following plate is also located on the appliance, which contains the main safety warnings.

EN	The appliance must be connected according to the current regulations and only used in well ventilated rooms. Pay particular attention to the user and maintenance instructions before operating it.

!	The plates must never be removed (the setup can be updated if converted to another gas type)

Outside the package, there is a plate that provides information about the current gas setup in addition to information about the country of destination and the safety warnings. This plate may be disposed of together with the package according to current national regulations.

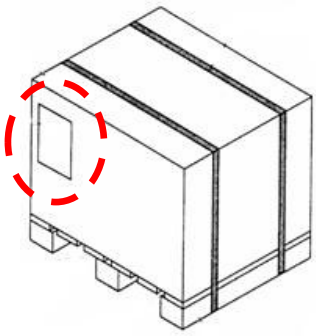

1.13 OVEN DELIVERY

The oven is supplied in a closed cardboard package bound with straps to a wooden platform that can be moved using forklifts and/or other equipment.
Inside of the package, in addition to the machine, there are also instructions for use, installation and maintenance, as well as the declaration of conformity in accordance with current regulations.

2. SAFETY WARNINGS

2.1 WARNINGS FOR THE INSTALLER

!	Check that the location of the oven is in compliance with local, national and European regulations.

The installation, adaptation to another type of gas and extraordinary maintenance (such as the replacement of faulty components or the resolution of any anomalies) must be carried out only by qualified personnel according to the regulations in force in the country of use, respecting the regulations relating to systems and workplace safety and equipped with the necessary professional requirements.
Installation, use or maintenance other than that indicated in this manual may cause damage, injury or death.
Interventions, tampering or modifications not expressly authorized which do not comply with what is stated in this manual may cause damage, injuries or fatal accidents and will void the warranty.
At the end of the installation or any maintenance intervention, the technician must always issue a signed copy of the technical intervention report.

!	**Install and operate the equipment only in an adequately ventilated in accordance with the rules in force. Verify that the volume of the room is appropriate and that the ventilation systems (natural or forced) are fully efficient urging the equipment managers to guarantee the healthy work environment.**

- Always follow the instructions in this manual.
- Check that the gas supply system meets all the requirements for a correct connection to the appliance according to current regulations.
- Do not make electrical connections using temporary or non-insulated cables.
- Check that the earth connection of the electrical system is functioning properly.
- Always use personal safety devices and other means of protection foreseen by law.

2.2 WARNINGS FOR THE USER

☞	The environmental conditions of the location where the oven is installed must have the following characteristics:

- Be dry;
- Be at a safe distance from water and heat sources.
- Have adequate ventilation and lighting that comply with the hygiene and safety standards required by current laws;
- The floor must be flat and compact to facilitate thorough cleaning;
- No obstacles of any kind should be placed in the immediate vicinity of the oven, which could affect its normal ventilation.

Furthermore, the user must take heed of the following:

- Make sure that children do not approach the oven when it is in use;
- Comply with the instructions provided in this Manual.
- Do not remove or tamper with the oven safety devices;
- Always pay utmost attention, i.e., the user must pay attention to what he/she is doing and not use the oven when distracted;
- Perform all operations with utmost safety and in a calm manner.
- Comply with the instructions and warnings provided on the oven plates.
  The plates are safety devices; therefore, they must always be perfectly legible. If they become damaged or illegible, they must be replaced by requesting an original replacement from the Manufacturer.
- The oven must be used with the door open. Keep children far away from the oven.
- During normal use, the internal parts of the oven become very hot. Never touch the internal parts of the oven as they can cause burns. Keep children far away from the oven.
- When using baking trays or saucepans for cooking, always use gloves or special utensils to handle these.
- Never obstruct the ventilation and heat dissipation openings.
- Do not obstruct the flue gas outlet pipes.
- Do not place flammable materials inside or near the oven.
- Do not use the oven chamber to store materials of any kind.
- Do not use abrasive products, corrosive substances, metal scrapers or any other substances or tools that might damage the surface when cleaning the door glass. The oven must be cleaned when it is cold.
- Do not place objects or sit on the door.
- Never leave the appliance unattended.
- In the event of a fault, do not attempt to repair the appliance in any way, immediately contact the technical support instead.
- Do not cover the bottom of the cooking chamber with aluminium foil or other materials.
- Do not use the oven for uses other than those for which it is intended.
- Do not modify the functional and performance features of the oven and/or its components.
- Disconnect the power supply at the end of each use and before cleaning and maintenance operations.

2.3 WARNINGS FOR THE MAINTENANCE TECHNICIAN

☞	Observe the instructions indicated in this manual.

- Always use individual safety devices and other protection means.
- Before starting any maintenance operations, make sure that the oven, if it was used, has cooled down .
- Shut off the gas supply by closing the manual shut-off cock that must be installed in the system according to regulations.
- Disconnect the electrical power before working on electrical or electronic parts and connectors.
- If any of the safety devices are worn or faulty, the oven is also considered faulty.

  - Installation, adaptation to another type of gas and extraordinary maintenance (such as the replacement of faulty components or the resolution of any anomalies) must be carried out only by qualified personnel according to the regulations in force in the country of use, respecting the regulations relating to systems and workplace safety and equipped with the necessary professional requirements.

• Installation, use or maintenance other than that indicated in this manual may cause damage, injury or death.
• Interventions, tampering or modifications not expressly authorized which do not comply with what is stated in this manual may cause damage, injuries or fatal accidents and will void the warranty.

• At the end of the installation or any maintenance intervention, the technician must always issue a signed copy of the technical intervention report.

3. GENERAL SPECIFICATIONS

3.1 Features

The gas pizza oven is for professional use only and its external panels with specific slots and ventilation holes, are made of painted iron. The oven is equipped with a cooking chamber featuring refractory plates that can receive from four to nine standard pizzas at the same time, depending on the model. The cooking chamber is heated by an atmospheric burner fixed under the plates. The cooking temperature is programmed by the control thermostat on the control panel and is displayed by the digital thermometer on the top. The gas supply is regulated by the solenoid valve that supplies the burner with on/off cycles. The presence of the flame is registered by a detection electrode connected to the circuit board.
If there is an ignition failure or absence of gas, the burner reset button must be activated and the causes that led to the block must be rectified. The oven must be installed perfectly level in a good-sized, well-ventilated room.

3.2 Technical data

FLAME 4	**External dimensions (cm)**			
	Width	Depth	Height	
	113	91	47	
	Cooking chamber dimensions (cm)			
	Width	Depth	Height	
	70	70	15	
	Weight (kg)		**Ø FLUE GAS (cm)**	
	132		15	
	ELECTRIC DATA			
	Supply voltage (V)	Frequency (Hz)	Maximum power absorbed (W)	Power cable
	220-230	50	50	3 x 0.75 mm^2
	Other data			
	Gas connection fitting	Type of gas installation	Electrical safety class	
	½”	A_1 - B_{11} - B_{21}	I	

FLAME 6	**External dimensions (cm)**			
	Width	Depth	Height	
	113	126	47	
	Cooking chamber dimensions (cm)			
	Width	Depth	Height	
	70	105	15	
	Weight (kg)		**Ø FLUE GAS (cm)**	
	164		15	
	ELECTRIC DATA			
	Supply voltage (V)	Frequency (Hz)	Maximum power absorbed (W)	Power cable
	220-230	50	50	3 x 0.75 mm^2
	Other data			
	Gas connection fitting	Gas connection fitting	Gas connection fitting	
	½”	B_{11} - B_{21}	I	

FLAME 6L	**External dimensions (cm)**			
	Width	Depth	Height	
	148	91	47	
	Cooking chamber dimensions (cm)			
	Width	Depth	Height	
	105	70	15	
	Weight (kg)		**Ø FLUE GAS (cm)**	
	196		18	
	ELECTRIC DATA			
	Supply voltage (V)	Frequency (Hz)	Maximum power absorbed (W)	Power cable
	220-230	50	50	3 x 0.75 mm^2
	Other data			
	Gas connection fitting	Gas connection fitting	Gas connection fitting	
	½”	B_{11} - B_{21}	I	

FLAME 9	**External dimensions (cm)**			
	Width	Depth	Height	
	148	126	47	
	Cooking chamber dimensions (cm)			
	Width	Depth	Height	
	105	105	15	
	Weight (kg)		**Ø FLUE GAS (cm)**	
	196		18	
	ELECTRIC DATA			
	Supply voltage (V)	Frequency (Hz)	Maximum power absorbed (W)	Power cable
	220-230	50	50	3 x 0.75 mm^2
	Other data			
	Gas connection fitting	Gas connection fitting	Gas connection fitting	
	½”	B_{11} - B_{21}	I	

3.3 Wiring diagrams

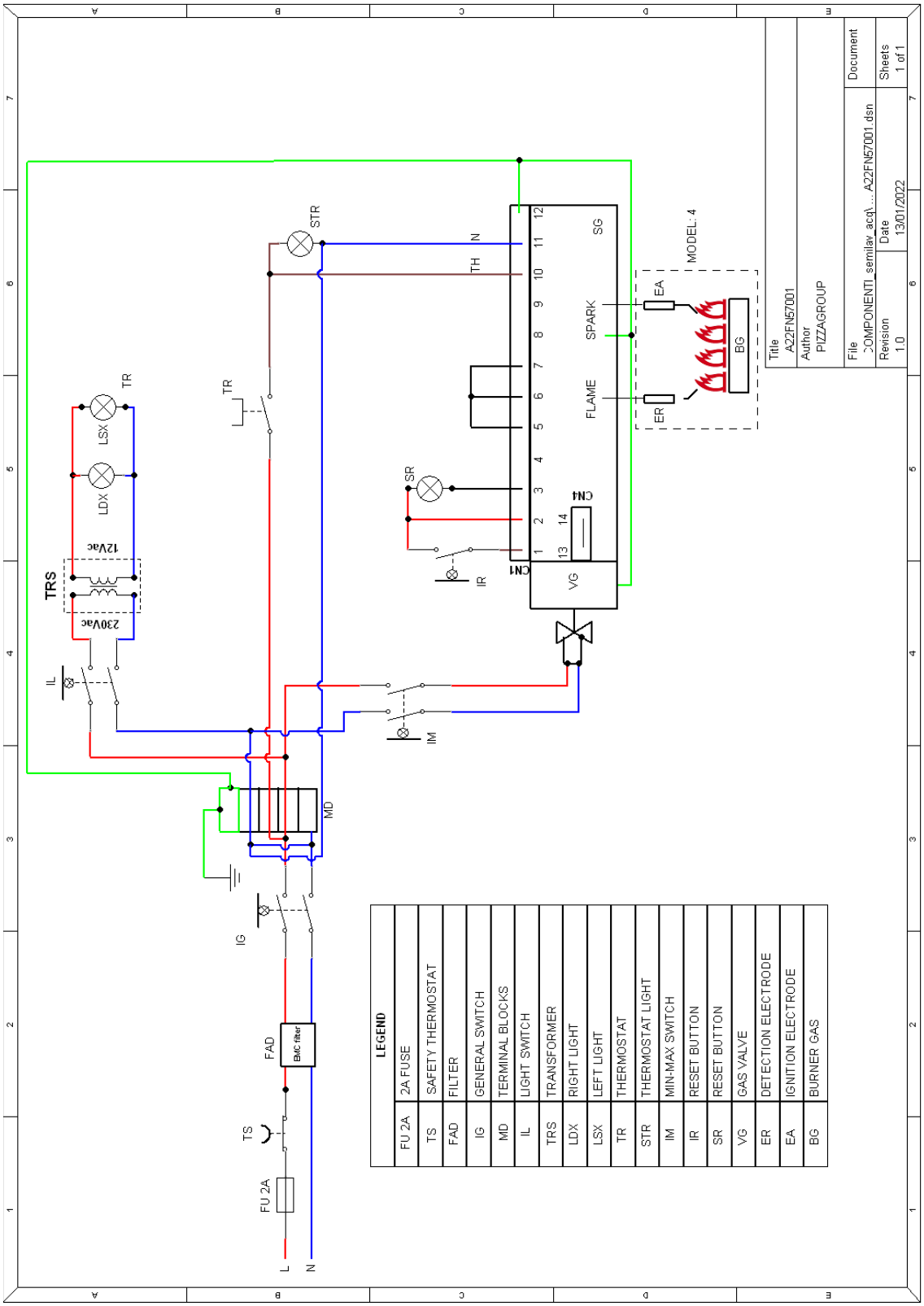

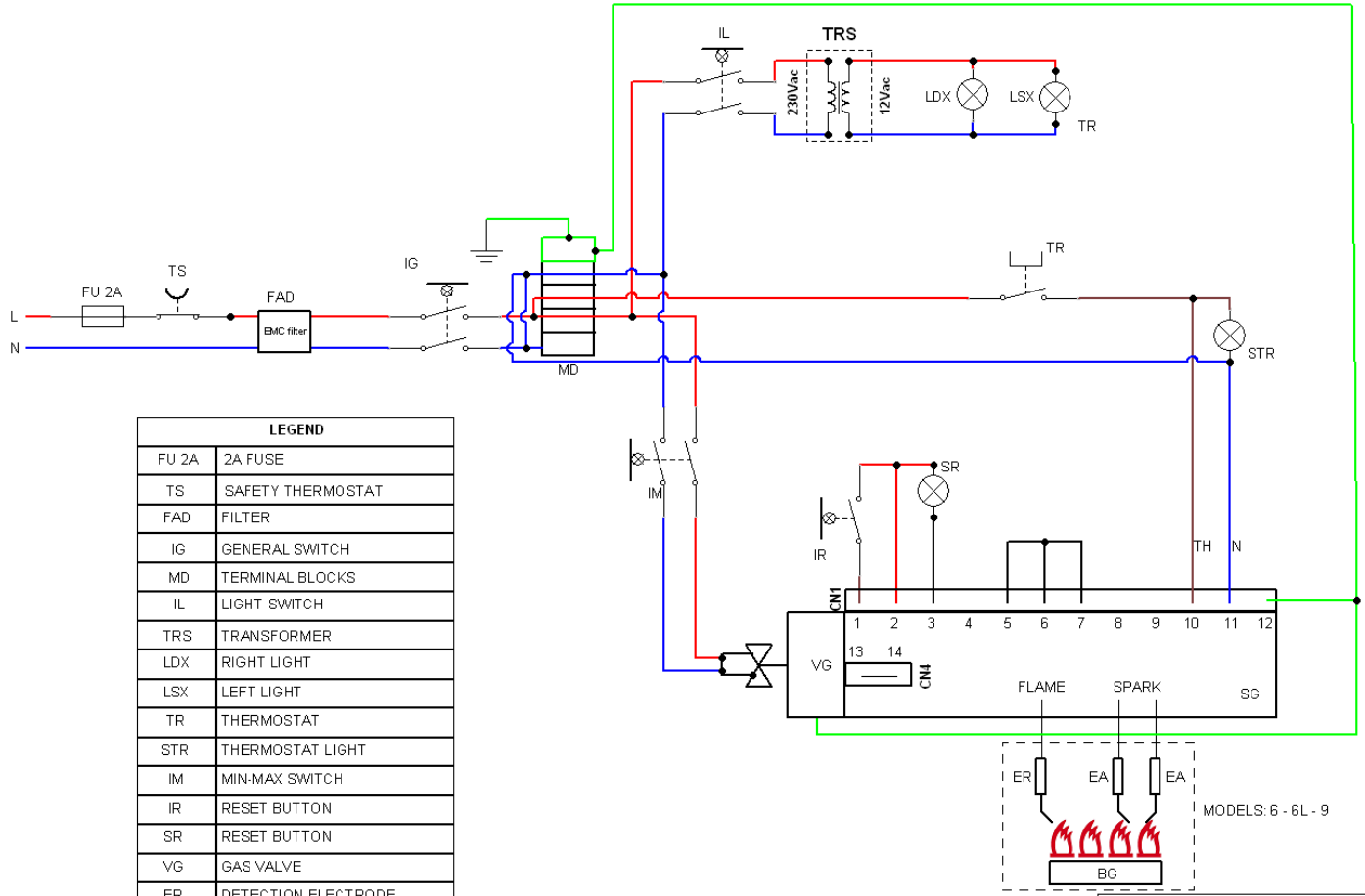

LEGEND	
FU 2A	2A FUSE
TS	SAFETY THERMOSTAT
FAD	FILTER
IG	GENERAL SWITCH
MD	TERMINAL BLOCKS
IL	LIGHT SWITCH
TRS	TRANSFORMER
LDX	RIGHT LIGHT
LSX	LEFT LIGHT
TR	THERMOSTAT
STR	THERMOSTAT LIGHT
IM	MIN-MAX SWITCH
IR	RESET BUTTON
SR	RESET BUTTON
VG	GAS VALVE
ER	DETECTION ELECTRODE
EA	IGNITION ELECTRODE
BG	BURNER GAS

Title FLAME 6-9		
Author		
File :OMPONENTI_semilav_acq\ ... A22FN57001.dsn		Document
Revision 1.0	Date 24/07/2018	Sheets 2

Legenda - Key		
Symbol	**Descrizione**	
L	Linea di Fase	Phase line
N	Linea di Neutro	Neutral line
FAD	Filtro EMC	EMC filter
TS	Termostato di sicurezza a riarmo manuale	Manual reset safety thermostat
IG	Interruttore generale	Main switch
MD	Morsettiera	Terminal board
IL	Interruttore luce	Light switch
TRS	Trasformatore	Transformer
LDX-LSX	Luci camera	Chamber light
SAP	Spia presenza tensione	Power supply indicator light
FU	Fusibile (2A)	Fuse (2 A)
TR	Termostato di regolazione	Control thermostat
STR	Spia temperatura	Temperature indicator light
IM	Interruttore Stand-by	Standby switch
IR	Pulsante di riarmo	Reset button
SR	Spia mancata accensione	Flame failure indicator light
VG	Elettrovalvola	Solenoid valve
SG	Dispositivo elettronico	Electronic device
EA	Elettrodo di accensione	Ignition electrode
ER	Elettrodo di rilevazione	Detection electrode
BG	Bruciatore	Burner

4. HANDLING AND TRANSPORT

The appliance is supplied complete with all its parts in a special closed packaging that is fixed with straps to a wooden platform (pallet).

The oven must be unloaded and handled by a qualified forklift operator.

To transport the oven to the installation site, use a wheeled trolley with a suitable capacity.
When lifting, avoid tearing the packaging or sudden movements.
Make sure that the lifting equipment has a load-bearing capacity greater than the weight of the load to be lifted.
The lifting equipment operator will be fully responsible for lifting the loads.
The oven must be installed by qualified personnel in accordance with the local, national and European regulations.
Make sure that the oven's support surface has an adequate load-bearing capacity and is level.
After the oven has been removed from its special packaging, position it where desired whilst taking into account the minimum safety distances from walls and/or other appliances.

Keep a distance of at least **25 cm** between the oven and the room's side walls, and where possible, leave at least **50 cm** on the right side so that the electrical system can easily be accessed for maintenance and/or repairs. Leave a gap of at least **50 cm** from the back wall.

m	**Make sure that children do not play with the packaging components (e.g. film and polystyrene). Suffocation hazard!**

5. PREPARING THE INSTALLATION SITE

5.1 SAFETY PRECAUTIONS

!	Any works carried out in the location of the appliance, is and remains the responsibility of the user. The latter is also responsible for carrying out checks on the proposed installation solutions.

The user must comply with all local, national and European safety regulations.
The appliance must be installed on floors with an adequate load-bearing capacity.
The appliance's assembly and disassembly instructions are reserved for specialised technicians only.
We recommend that users always contact our support service for any requests they may have for the qualified technicians.
Before starting the appliance's assembly or disassembly procedure, the installer must comply with the safety precautions required by law, and the following in particular:

- He/she must not operate in adverse conditions;
- The installer must operate in perfect psychophysical conditions and must check that the individual and personal safety devices are intact and fully functional;
- He/she must wear safety gloves;
- He/she must wear safety shoes;
- He/she must use electrically-insulated tools;
- He/she must make sure that there are no obstacles in the assembly/disassembly area.

5.2 OVEN INSTALLATION SITE

The figure below shows the minimum distances that must be respected when positioning the oven in order to make using, cleaning and maintaining the oven easier, in addition to allowing for proper ventilation.

Keep a distance of at least **25 cm** between the oven and the room's side walls, and where possible, leave at least **50 cm** on the right side so that the electrical system can easily be accessed for maintenance and/or repairs. Leave a gap of at least **50 cm** from the back wall.

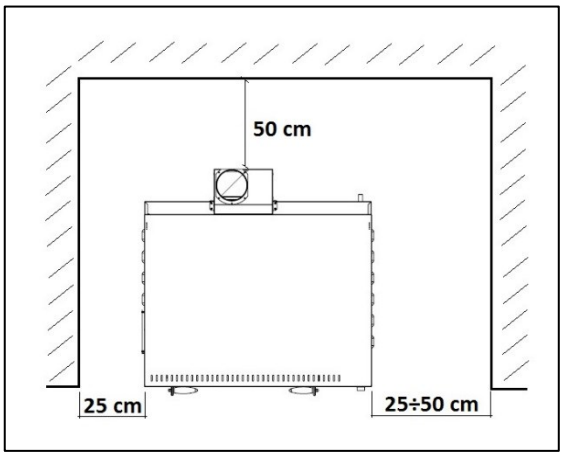

6. INSTALLATION (chapter for the installer technician)

☞	Any operation indicated in this chapter is not the responsibility of the user, who must not in any way carry out the operations, measurements and adjustments indicated here. Any operation carried out by unauthorized personnel will be considered tampering with the product and therefore the responsibility for any malfunctions, or worse for accidents and/or damage, will fall on the person who carried out such operations. Interventions, tampering or modifications not expressly authorized that do not comply with what is stated in this manual may cause damage, injuries or fatal accidents and will void the warranty.

Installation can only be carried out by qualified personnel and in compliance with the warnings, recommendations and provisions contained in this manual as well as in compliance with the regulations in force in the country of use.

6.1 POSITIONING THE OVEN

Make sure that the oven's support surface has an adequate load-bearing capacity, is level and is made of non-combustible materials (steel, marble, etc.). Check that the underlying compartment does not contain flammable materials (such as liquids) or gas cylinders. Inform the user of this safety warning.
After the oven has been removed from its special packaging, position it where desired whilst taking the minimum distances into account (see point 4.2).

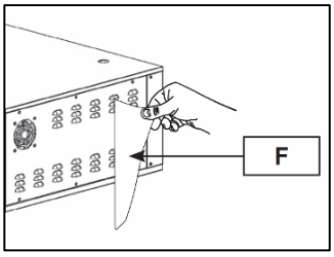

Remove any polystyrene protections and ***the protective film (F)*** without using tools that could damage the surfaces.

6.2 CONNECTION TO THE UTILITIES

6.2.1 Electrical connection

When connecting the appliance electrically, a differential magnetothermic switch with suitable characteristics must be interposed, with an opening distance between the contacts of at least 3 mm. To connect the oven electrically simply connect the plug on the provided electrical cable.
The electrical outlet must be easy to access, no moving should be necessary.

!	**The electrical connection (plug) must be easily accessible, also following oven installation.** The distance between the machine and the socket must be adequate to not cause tension in the power supply cable. In addition, the cable must not be located beneath the machine support base.

!	**If the power supply cable has been damaged, it must be replaced by the technical assistance service or by a qualified technician to prevent any risks.**

6.2.1.1 Earth connection

!	**It is mandatory that the electrical system is equipped with an earth connection.**

6.2.2 Connection to the gas network

☞	Before connecting the oven to the gas system, check the oven's requirements relating to the gas supply. The specifications for the type of setup are shown on the plate (see paragraph 1.13). The oven is equipped with a cylindrical ½ ” GAS threaded pipe in the rear lower part (see figure) for connection to the gas system.

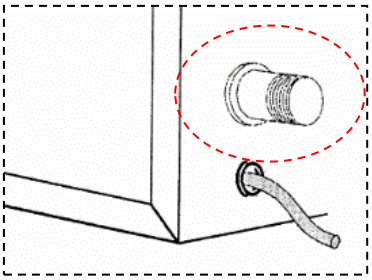

Check first that the gas distribution system is standard compliant, and in particular that the pipes comply with the current regulations and laws on building safety. The sections of the fixed pipes in the system must be able to supply all the appliances in the room, and must be made of rigid steel or copper, and be positioned in view.
It is mandatory to install a manual shut-off cock between each appliance and the gas supply network, in compliance with current applicable regulations.
It is important to position the cut-off cock in an easy to reach position to make it possible to open or close it when necessary.
The oven must be connected to the gas supply system using specific fittings and pipes that comply with current regulations. If using flexible steel pipes, these must be easy to inspect and the length must not exceed 1,5 metre and must not be crimped or be subjected to traction or torsion forces. Be also careful to ensure that the pipe is not in contact with edges, sharp or hot parts that could damage it, jeopardising operation and safety.

!	After performing the installation operations, a check must be performed to ensure that there are no gas leaks. This check can be performed using a leak detector spray or non-corrosive foaming substances.

!	**It is strictly forbidden to use open flames to search for gas leaks.**

6.2.3 Connection to the chimney and flue

For the evacuation of combustion fumes are provided, even according to the national laws in force in the country of destination, the following types of installation:

A1: unit without fan and natural draft not designed for connection to an exhaust pipe or to a device for discharging the products of combustion to the outside of the room in which the appliance is installed. The intake of combustion air and the evacuation of the combustion products are made in the installation.

B11: unit without fan, with natural draft and break draft device; it is designed to be connected with a pipe to a chimney / flue which discharges the products of combustion outside the room where the appliance is installed. The combustion air is drawn directly from the room while the intake of combustion air occurs in the installation.

B21: unit without fan, with natural draft and break draft without device; it is designed to be enslaved under a hood that discharges the products of combustion outside the room where the appliance is installed. The combustion air is drawn directly from the room while the intake of combustion air occurs in the installation.

The type of installation depends on the type of gas appliance, from its nominal thermal capacity, the volume of the room, by the presence of forced ventilation systems and conditions that are nevertheless governed by the national laws in the field of installation of gas appliances.

Note: in models of ovens pizza FLAME FLAME 4 and 6, the device break draft (equipped with wind) is already integrated in the exhaust fumes embedded in the oven. In the model the device FLAME 9 break draft is a separate accessory that must be arranged in case of installation of the type B11.
The device break draft (equipped with wind), in case of installation B11 is necessary to ensure the functionality of the device in the presence of airflow obstruction or otherwise through the system / exhaust pipe to the outside.

Schematic example of an installation of the type A1 valid only for the FLAME 4 Model

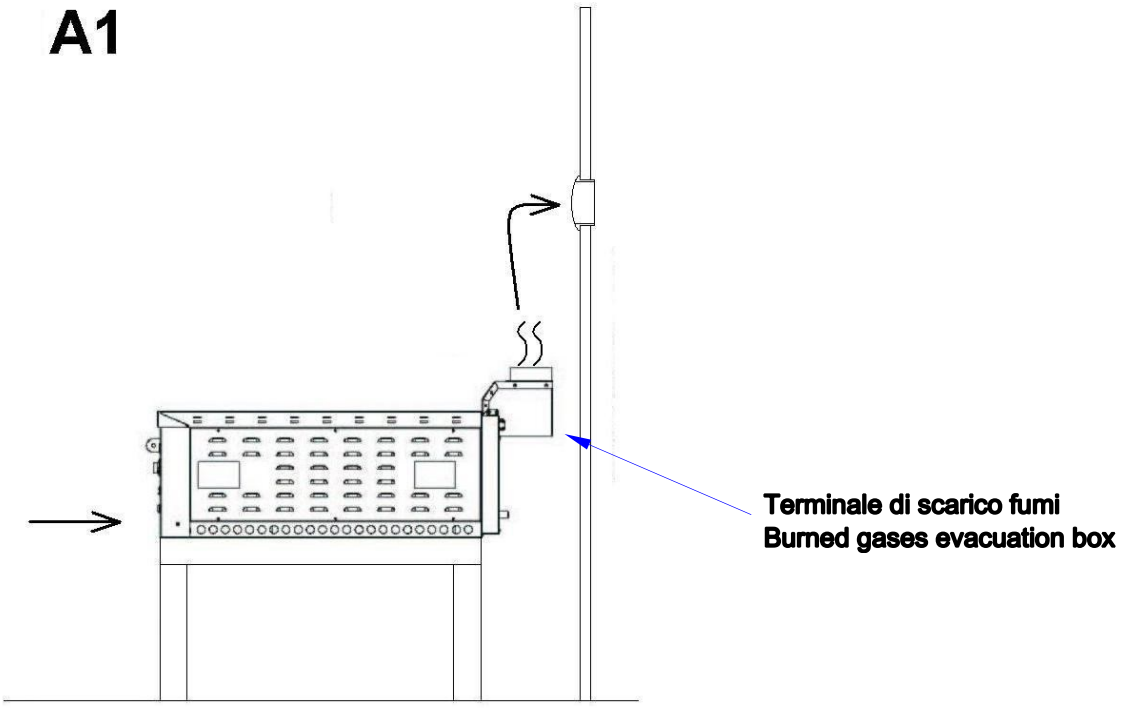

Evacuazione diretta dei fumi, senza raccordo verso l'esterno per modelli 4
Direct evacuation of the fumes without direct connection to the outside for models 4

Schematic example of an installation of the type B11 valid for Models FLAME4 and FLAME 6

In models of ovens pizza FLAME 4 and FLAME 6, the device break draft (equipped with wind) is already integrated into the flue terminal built-in ovens.
At the exit of the flue terminal to install at least 500 mm of vertical pipe.
The vertical section of pipe can be reduced to installation requirements, it is important not to use 90 ° bends immediately after the union of the tailpipe which provides a metal tube with a diameter of 150 mm.

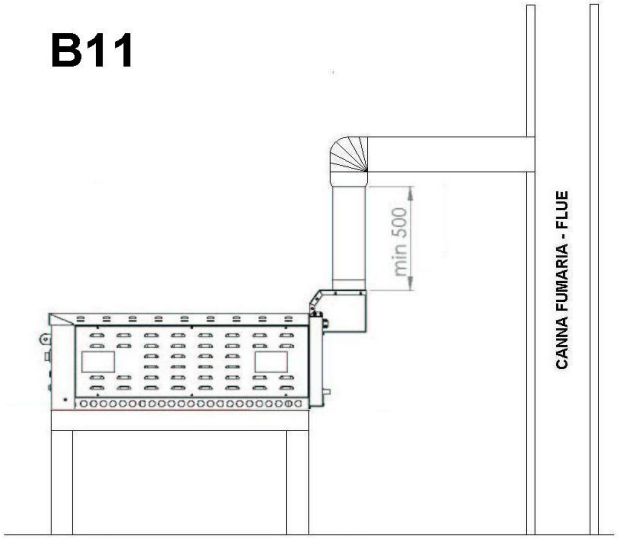

Collegamento alla canna fumaria per modelli 4-6
Connection to the flue for models 4-6

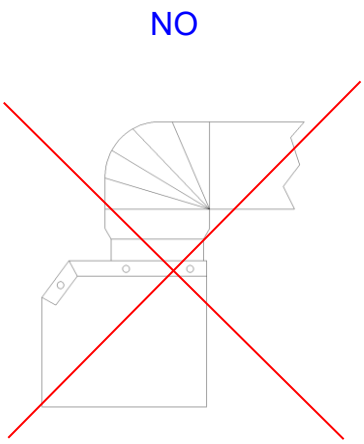

Collegamento non conforme
Installation not in accordance

<u>Schematic example of an installation of the type B11 valid for the Model FLAME 6L and FLAME 9</u>

In models FLAME6L and FLAME 9 must install the device break draft (equipped with wind) between the nozzle of the exhaust fumes and the vertical pipe whose diameter is 180 mm.

The output of the device break draw at least 500 mm of vertical metal tube (diameter 180 mm).
The vertical section of pipe can be reduced to installation requirements, it is important not to use 90 ° bends right after the break draft device.

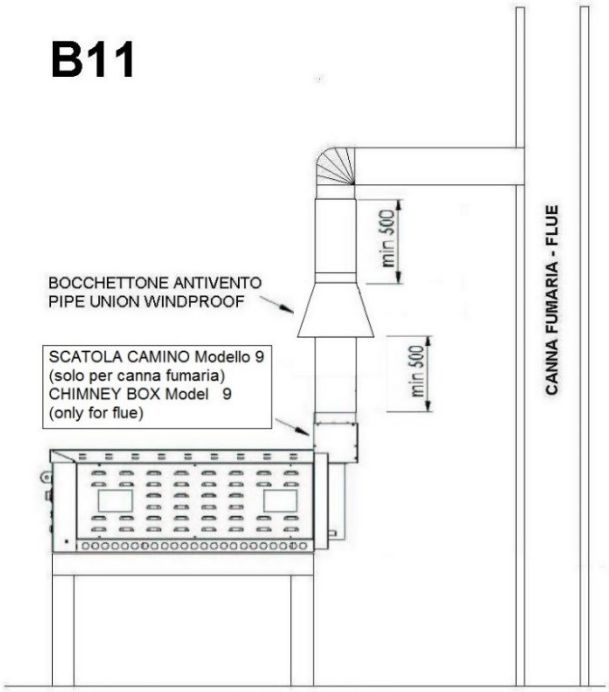

Collegamento alla canna fumaria per modello 9
Connection to the flue for model 9

Schematic example of an installation of the type B11 FLAME valid for Models FLAME 4, FLAME 6, FLAME 6L and FLAME 9.

To install B21, enslaved under the hood, you do not need any vertical section of pipe is not required and the device used to break draft oven FLAME 6L and FLAME 9. Ovens FLAME4 and FLAME 6 have already been integrated into the device break draft tailpipe and must not be removed.

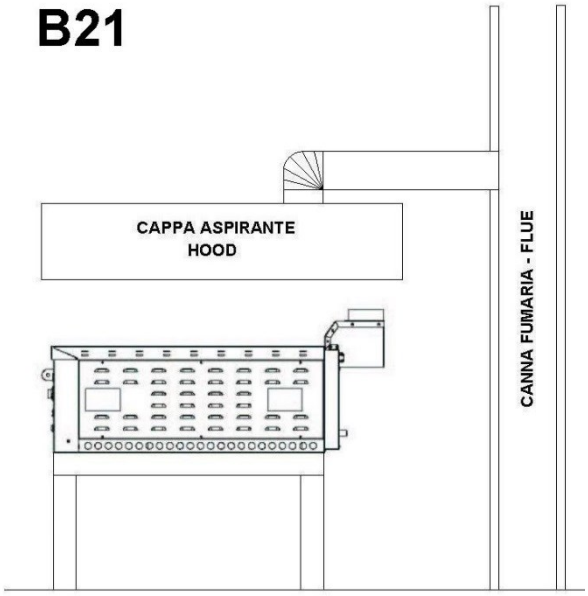

Sotto cappa aspirante per i modelli 4-6
Under hood for models 4-6

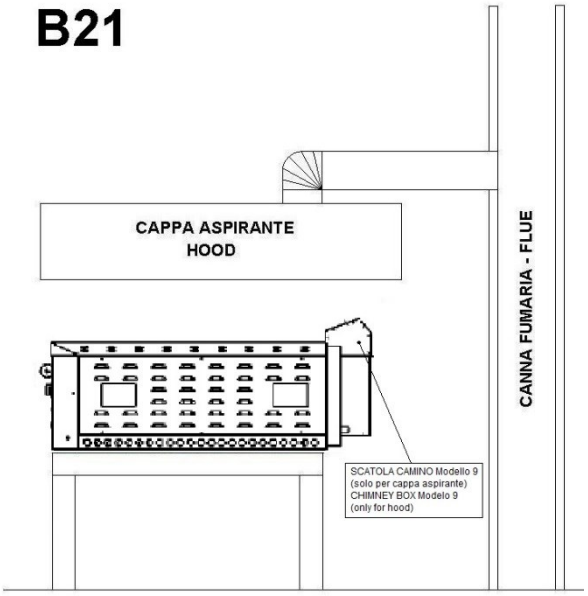

Sotto cappa aspirante per i modelli 9
Under hood for models 9

PARAMETRI AL CAMINO / CHIMNEY PARAMETERS

Flame 4 oven	Gas G30	Gas G20	Gas G25	Gas G25.1	Gas G25.3
Pressione fumi al camino [Pa] Chimney smoke pressure [Pa]	-2.0	-1.8	-2.1	-2.1	-2.2
Temperatura fumi al camino [°C] Chimney smoke temperature [°C]	127	135	132	132	134
Massa fumi [g/s] Smoke mass [g/s]	41.00	39.52	41.42	42.72	37.61
Valori per singolo forno, raccolti con tubo verticale di 1 metro e diametro Ø 150 mm Values for a single oven, collected with a 1-metre vertical tube with a diameter (Ø) of 150 mm.					

Flame 6 oven	Gas G30	Gas G20	Gas G25	Gas G25.1	Gas G25.3
Pressione fumi al camino [Pa] Chimney smoke pressure [Pa]	-2.4	-2.4	-2.5	-2.4	-2.2
Temperatura fumi al camino [°C] Chimney smoke temperature [°C]	125.0	128.0	120.0	124.0	126,0
Massa fumi [g/s] Smoke mass [g/s]	40.99	38.80	40.98	42.02	36.56
Valori per singolo forno, raccolti con tubo verticale di 1 metro e diametro Ø 150 mm Values for a single oven, collected with a 1-metre vertical tube with a diameter (Ø) of 150 mm.					

Flame 6L oven	Gas G30	Gas G20	Gas G25	Gas G25.1	Gas G25.3
Pressione fumi al camino [Pa] Chimney smoke pressure [Pa]	-2,2	-2,2	-2,3	-2,4	-2.1
Temperatura fumi al camino [°C] Chimney smoke temperature [°C]	142	140	145	139	136
Massa fumi [g/s] Smoke mass [g/s]	41,89	39,52	41,66	42,02	37,12
Valori per singolo forno, raccolti con tubo verticale di 1 metro e diametro Ø 180 mm Values for a single oven, collected with a 1-metre vertical tube with a diameter (Ø) of 180 mm.					

Flame 9 oven	Gas G30	Gas G20	Gas G25	Gas G25.1	Gas G25.3
Pressione fumi al camino [Pa] Chimney smoke pressure [Pa]	-1.9	-1.8	-1.8	-1.9	-1.5
Temperatura fumi al camino [°C] Chimney smoke temperature [°C]	141	133	131	130	158
Massa fumi [g/s] Smoke mass [g/s]	52.45	50.78	56.68	56.23	52.49
Valori per singolo forno, raccolti con tubo verticale di 1 metro e diametro Ø 180 mm Values for a single oven, collected with a 1-metre vertical tube with a diameter (Ø) of 180 mm.					

STACKED OVENS

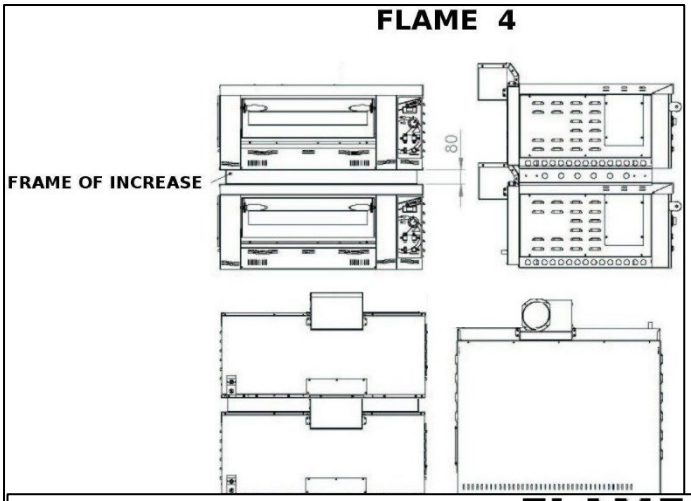

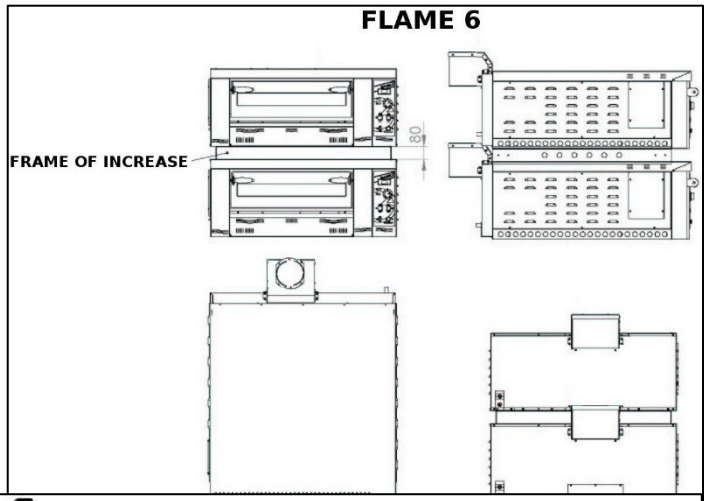

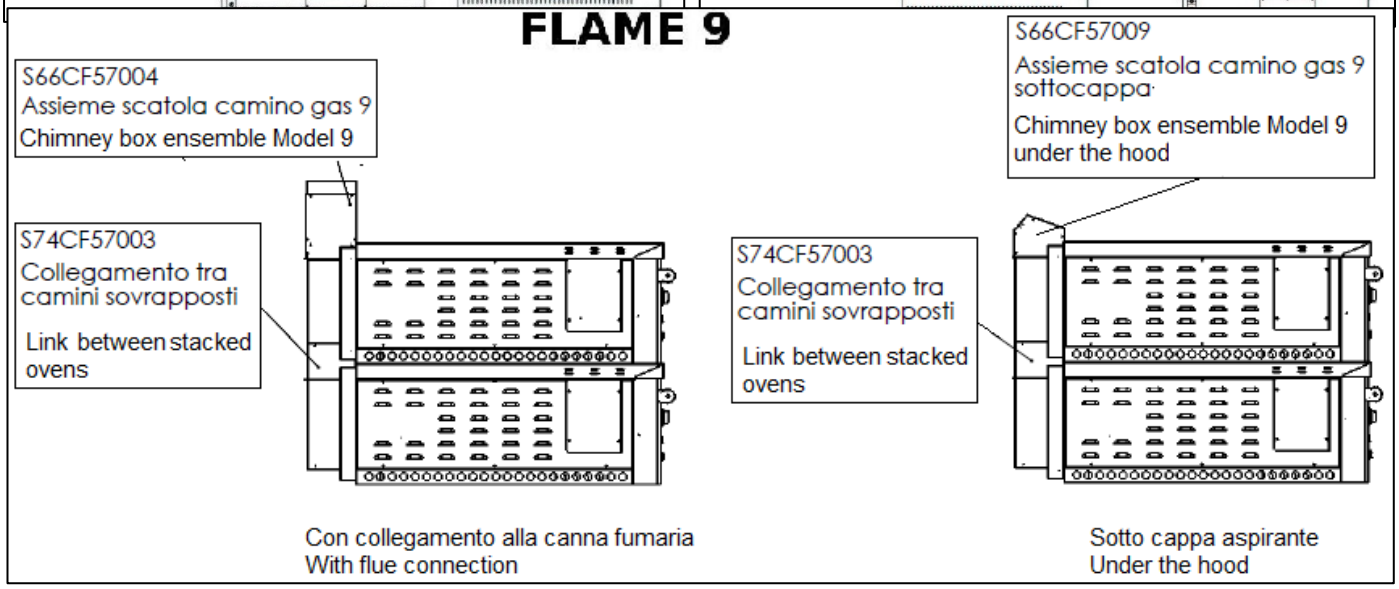

Please note: In the FLAME 4 and FLAME 6 pizza oven models, the superimposition of the two ovens means that the lower oven is equipped with an inclined vertical tube (at 45°) in order to be able to discharge the smoke away from the discharge outlet of the upper oven, thereby avoiding disturbing the correct forced draught.

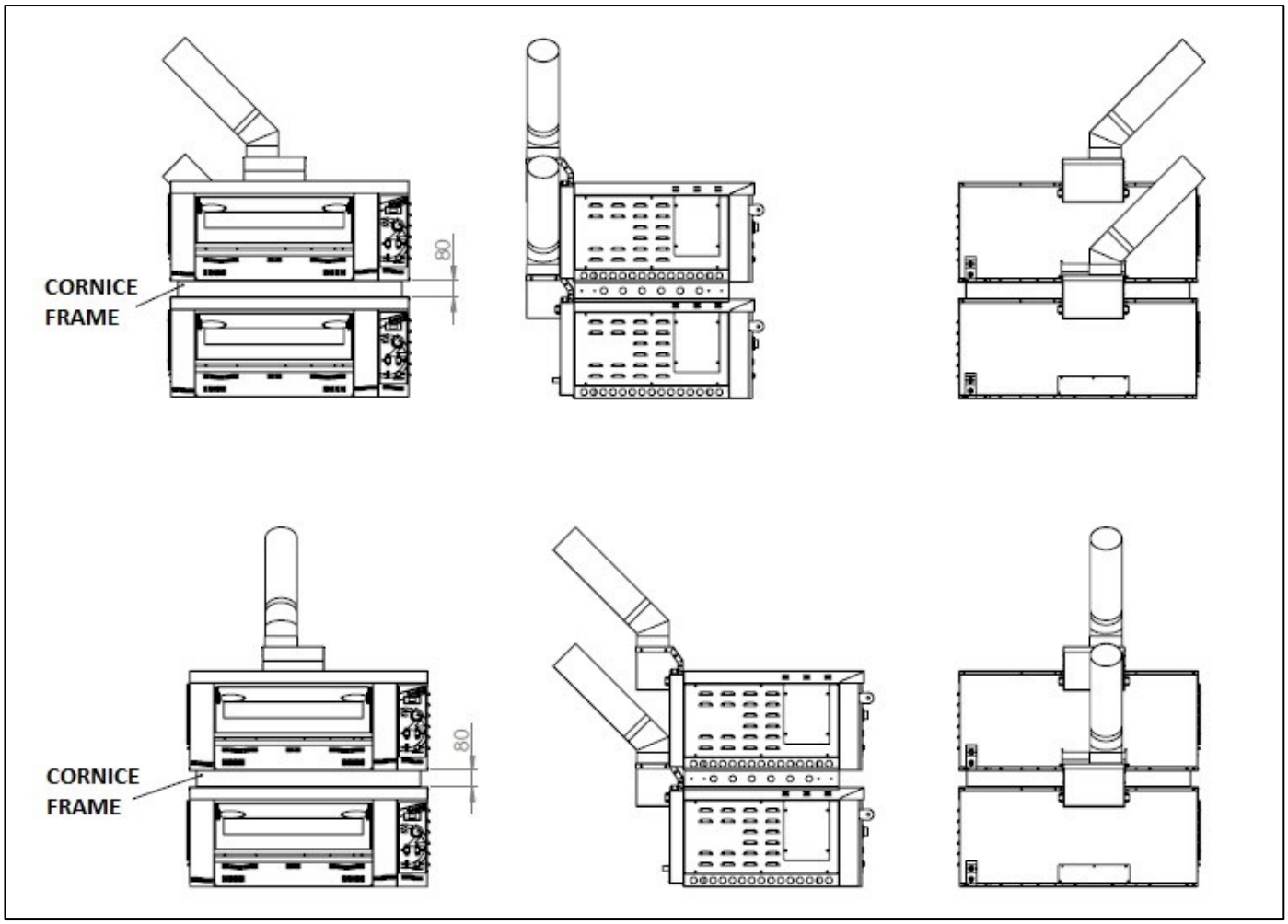

6.2.4 Checking the supply pressure and heat input

!	**Before checking the supply pressure, make sure that the gas has been set up correctly on site.**

The pressure (connection and output) must be measured when the oven is running, i.e. the burner must be switched on. The burner is ignited by following the procedure indicated in paragraph 6.3: START-UP PHASE. The gas supply pressure check must be carried out with a differential pressure gauge, connected to the pressure tap via a special hose. The following images show the gas control unit and electronic control unit; the points where the pressure gauge and pressure adjustment screw are connected are also indicated.

Key:

1. SV1;
2. SV2;
3. Inlet pressure tap (Pin);
4. Outlet pressure tap (Pout);
5. Chamber compensation (not in use);
6. Outlet gas pressure modulator.

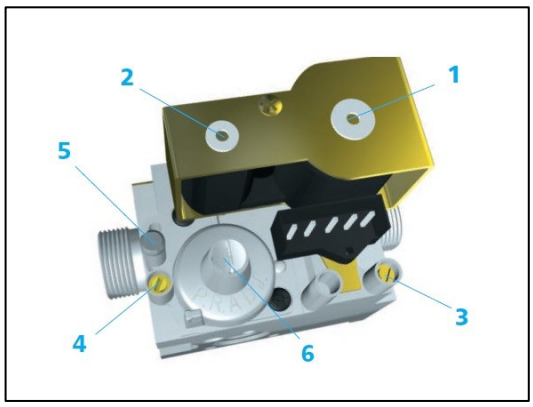

☞	All adjustments must be made in the order shown.

!	Check the inlet and outlet pressures using the specific metering units. Once the check has been completed, close the seal with the appropriate screws. Recommended tightening torque: 1.0 Nm.

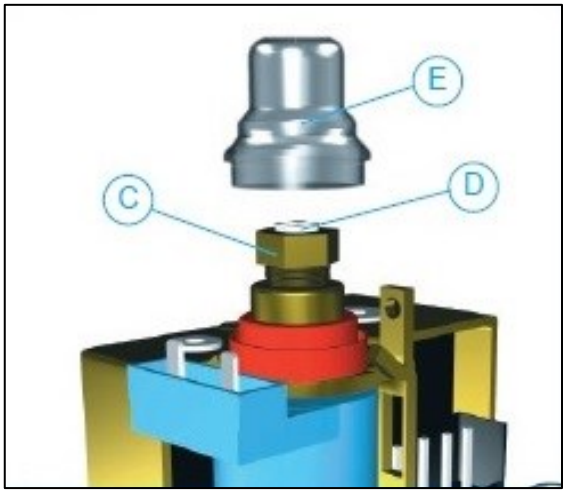

1. Remove the modulator's plastic cap (E).

2. **Inlet pressure:**
   Connect the pressure gauge to the inlet pressure tap (3-Pin) via the special hose, once the relative sealing screw has been removed.
   After the pressure gauge has been connected, open the gas shut-off valve (set up in the system) and switch on the burner (start the oven). Measure the inlet pressure and check that the values correspond to what is shown in the table.
   If the measured pressure does not fall within the parameters shown in the table, the oven cannot be started up.

   The non-compliance of the pressure values must be reported to the body responsible for supplying the gas; this body will then have to check and resolve the problem.

   When the measurements have been taken, switch off the oven by following the procedure described in paragraph 6.7 (SWITCH-OFF
   PHASE), close the gas shut-off valve, detach the pressure gauge hose from the pressure tap (3-Pin), then replace and tighten the pressure tap sealing screw.

3. **Outlet pressure:**
   Connect the pressure gauge to the outlet pressure tap (4-Pout) via the special hose, once the relative sealing screw has been removed.
   After the pressure gauge has been connected, open the gas shut-off valve (set up in the system) and switch on the burner (start the oven).
   Measure the outlet pressure and check that the values correspond to what is shown in the table. The minimum pressure is obtained when the burner operates at its lowest setting (standby); the maximum pressure is obtained when the burner operates at maximum power.
   The outlet pressures (minimum and maximum) are preset by the manufacturer according to the oven's gas installation type.
   If it becomes necessary to make adjustments, only then should you proceed as indicated below.

4. **Maximum Pressure**:
   Turn on the oven in maximum pressure mode (green control panel switch [B] positioned on MAX).
   Tighten the outlet nut [C] to increase the pressure and loosen it to decrease the pressure. 10 mm spanner.

5. **Minimum Pressure**:
   Put the oven in minimum pressure mode (green control panel switch [B] positioned on MIN).
   Whilst keeping the nut [C] locked, tighten the screw [D] to increase the pressure and loosen it to decrease the pressure. 6x1 slotted screwdriver. Reposition the modulator's plastic cap.

!	**Warning:** The cap [E] must be repositioned in order for the modulator to work properly.

To check the pressures, compare the data obtained with the values shown in the following tables.

Technical data table 1 - FLAME 4 nominal data

Tipo di gas ***Gas type***	**Pressione nominale ingresso** ***Nominal inlet pressure*** **(mbar)**	**Portata termica nominale** ***Nominal heat input*** **(kW)**	**Portata termica ridotta** ***Reduced heat input*** **(kW)**	**Pressione all'uscita valvola (al MAX)** ***Valve outlet pressure (at MAX)*** **(mbar)**	**Pressione all'uscita valvola (al MIN)** ***Valve outlet pressure (at MIN)*** **(mbar)**	**Consumi del gas al MAX (con il potere calorifico inferiore)** ***Gas consumption at MAX (with net calorific value)***	**Regolatore di pressione** ***Pressure regulator***
G20	20	14	8	10	3.2	1.481 m^3/h	A
G20	25	14	8	10	3.2	1.481 m^3/h	A
G25	20	14	8	15	4.5	1.722 m^3/h	A
G25	25	14	8	15	4.5	1.722 m^3/h	A
G25.1	25	14	8	17	5.2	1.720 m^3/h	A
G25.3	25	14	8	14	4.0	1.685 m^3/h	A
G30/G31	28-30/37	14	8	28	9	1.104/1.088 kg/h	B
G30, G31	50	14	8	28	9	1.104/1.088 kg/h	A

Technical data table 1 - FLAME 6 nominal data

Tipo di gas ***Gas type***	**Pressione nominale ingresso** ***Nominal inlet pressure*** **(mbar)**	**Portata termica nominale** ***Nominal heat input*** **(kW)**	**Portata termica ridotta** ***Reduced heat input*** **(kW)**	**Pressione all'uscita valvola (al MAX)** ***Valve outlet pressure (at MAX)*** **(mbar)**	**Pressione all'uscita valvola (al MIN)** ***Valve outlet pressure (at MIN)*** **(mbar)**	**Consumi del gas al MAX (con il potere calorifico inferiore)** ***Gas consumpion at MAX (with net calorific value)***	**Regolatore di pressione** ***Pressure regulator***
G20	20	20	11	10	3.2	2.12 m^3/h	A
G20	25	20	11	10	3.2	2.12 m^3/h	A
G25	20	20	11	15	4.5	2.46 m^3/h	A
G25	25	20	11	15	4.5	2.46 m^3/h	A
G25.1	25	20	11	17	5.2	2.46 m^3/h	A
G25.3	25	20	11	14	4.0	2.406 m^3/h	A
G30/G31	28-30/37	20	11	27.6	7.5	1.58/1.55 kg/h	B
G30, G31	50	20	11	27.6	7.5	1.58/1.55 kg/h	A

Technical data table 1 - FLAME 6L nominal data

Tipo di gas ***Gas type***	**Pressione nominale ingresso** ***Nominal inlet pressure*** **(mbar)**	**Portata termica nominale** ***Nominal heat input*** **(kW)**	**Portata termica ridotta** ***Reduced heat input*** **(kW)**	**Pressione all'uscita valvola (al MAX)** ***Valve outlet pressure (at MAX)*** **(mbar)**	**Pressione all'uscita valvola (al MIN)** ***Valve outlet pressure (at MIN)*** **(mbar)**	**Consumi del gas al MAX (con il potere calorifico inferiore)** ***Gas consumpion at MAX (with net calorific value)***	**Regolatore di pressione** ***Pressure regulator***
G20	20	21,0	12,5	10	3,2	2,222 m^3/h	A
G20	25	21,0	12,5	10	3,2	2,222 m^3/h	A
G25	20	21,0	12,5	15	5,0	2,583 m^3/h	A
G25	25	21,0	12,5	15	5,0	2,583 m^3/h	A
G25.1	25	21,0	12,5	17	5,5	2,580 m^3/h	A
G25.3	25	21,0	12,5	14	4,5	2,527 m^3/h	A
G30/G31	28-30/37	21,0	12,5	27.6	9,0	1,656/ 1,631 kg/h	B
G30, G31	50	21,0	12,5	27.6	9,0	1,656/ 1,631 kg/h	A

Technical data table 1 - FLAME 9 nominal data

Tipo di gas ***Gas type***	**Pressione nominale ingresso** ***Nominal inlet pressure*** **(mbar)**	**Portata termica nominale** ***Nominal heat input*** **(kW)**	**Portata termica ridotta** ***Reduced heat input*** **(kW)**	**Pressione all'uscita valvola (al MAX)** ***Valve outlet pressure (at MAX)*** **(mbar)**	**Pressione all'uscita valvola (al MIN)** ***Valve outlet pressure (at MIN)*** **(mbar)**	**Consumi del gas al MAX (con il potere calorifico inferiore)** ***Gas consumpion at MAX (with net calorific value)***	**Regolatore di pressione** ***Pressure regulator***
G20	20	29	17.5	10	3.6	3.07 m^3/h	A
G20	25	29	17.5	10	3.6	3.07 m^3/h	A
G25	20	29	17.5	15	5.5	3.57 m^3/h	A
G25	25	29	17.5	15	5.5	3.57 m^3/h	A
G25.1	25	29	17.5	17	6.2	3.56 m^3/h	A
G25.3	25	29	17,5	13	4.5	3.489 m^3/h	A
G30/G31	28-30/37	29	17.5	27.5	10	2.29/2.25 kg/h	B
G30, G31	50	29	17.5	27.5	10	2.29/2.25 kg/h	A

A = Regolato nel funzionamento al MAX e al MIN / Adjusted to MAX and MIN operating mode.
A = Regolato nel funzionamento al MIN e fuori servizio al MAX/ Adjusted to MIN operating mode and out of service at MAX.

6.2.5 Converting to another type of gas

!	Conversion of the oven to another type of gas than the one for which it was made and tested by the manufacturer must be carried out only by qualified personnel according to the regulations in force in the country of use, respecting the regulations relating to systems and safety at work and equipped with the necessary professional requirements. .

The oven comes from the manufacturer designed for use with methane gas, unless otherwise specified by the customer. The oven is supplied with an injector kit (nozzles) for adapting to a different type of gas (Liquid Gas).

!	Before proceeding with the conversion, close the gas supply and disconnect the oven from the electrical mains.

In order to carry out this operation, the oven's lower front panel must be removed, as indicated below:

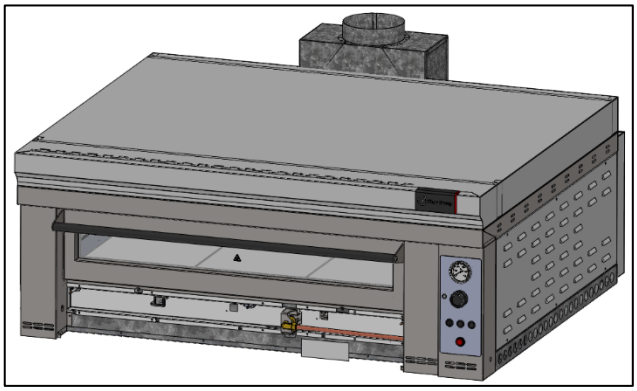

1) Remove the screws that secure the front panel (the parts circled in the figure);

2) Remove the front panel to access the nozzle.

3) Once the panel has been removed find the unit comprising the air bush and injector (see figure).

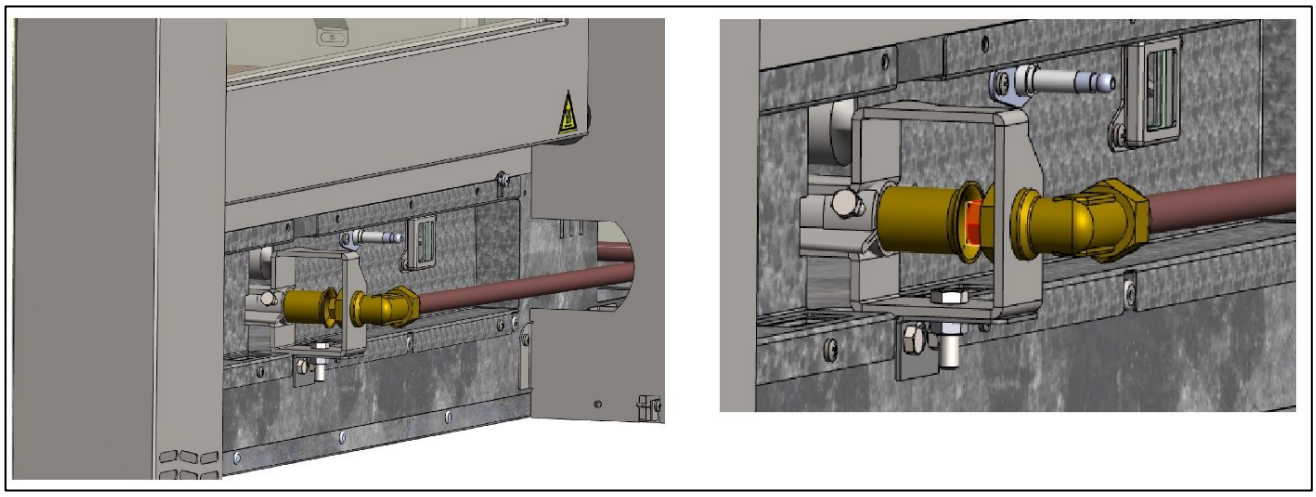

The procedure that converts to another gas must be carried out by replacing the injector (nozzle) and adjusting the primary air as shown in the following table.

☞	Before replacing the injector, check that it has been stamped with the correct diameter (expressed in 1/100 of a mm) and that it corresponds to the information indicated in the technical data table (see Tab. 2).

Technical data table 2 - FLAME 4 injectors and adjustments

Tipo di gas *Gas type*	Pressione in entrata *Inlet pressure* (mbar)	Diametro iniettore *Injector diameter* (1/100 mm)	Regolazione boccola aria primaria (H) *Primary air bush adjustment (H)* (mm)
G20	20	335	18
G20	25	335	18
G25	20	335	14
G25	25	335	14
G25.1	25	335	14
G25.3	25	335	14
G30/G31	28-30/37	195	18
G30, G31	50	195	18

Technical data table 2 - FLAME 6 injectors and settings

Tipo di gas *Gas type*	Pressione in entrata *Inlet pressure* (mbar)	Diametro iniettore *Injector diameter* (1/100 mm)	Regolazione boccola aria primaria (H) *Primary air bush adjustment (H)* (mm)
G20	20	400	14
G20	25	400	14
G25	20	400	14
G25	25	400	14
G25.1	25	400	14
G25.3	25	400	14
G30/G31	28-30/37	230	18
G30, G31	50	230	18

Technical data table 2 - FLAME 6L injectors and settings

Tipo di gas *Gas type*	Pressione in entrata *Inlet pressure* (mbar)	Diametro iniettore *Injector diameter* (1/100 mm)	Regolazione boccola aria primaria (H) *Primary air bush adjustment (H)* (mm)
G20	20	400	14
G20	25	400	14
G25	20	400	12
G25	25	400	12
G25.1	25	400	12
G25.3	25	400	13
G30/G31	28-30/37	230	20
G30, G31	50	230	20

Technical data table 2 - FLAME 9 injectors and settings

Tipo di gas *Gas type*	Pressione in entrata *Inlet pressure* (mbar)	Diametro iniettore *Injector diameter* (1/100 mm)	Regolazione boccola aria primaria (H) *Primary air bush adjustment (H)* (mm)
G20	20	500	13
G20	25	500	13
G25	20	500	13
G25	25	500	13
G25.1	25	500	13
G25.3	25	500	13
G30/G31	28-30/37	285	39
G30, G31	50	285	39

The primary air adjustment is performed by unscrewing the fixing screw **(V)** and modifying the distance **(H)** of the air bush **(B)** as shown in the following figure, according to the manufacturer's instructions **(see table 2)**.
Once the adjustment has been made, retighten the screw **(V)**.

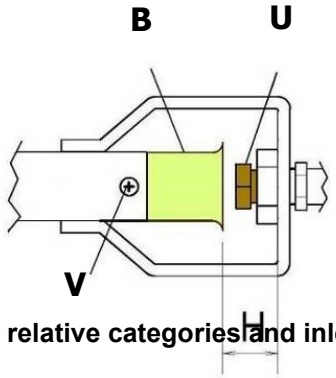

Technical data table 3 - Countries with their relative categories and inlet pressures

Categoria Categories	Pressione di allacciamento Supply pressure (p_n)	Paesi Countries
II2H3B/P	20, 50 mbar	AT, CH
II2H3B/P	20, 50 mbar	DK, EE, FI, HR, LT, NO, RO, SE, SI
II2H3+	20, 28-30/37 mbar	CZ, ES, GR, IE, IT, PT, GB, CH, SK, TR, CY
II2ELL3B/P	20, 50 mbar	DE
II2EK3B/P	20, 25, 28-30 mbar	NL
II2HS3B/P	20, 28-30 mbar	HU
I3+	28-30/37 mbar	FR, BE
I2E	20 mbar	PL
I2E(R)	20/25 mbar	BE
I2Esi	20/25 mbar	FR
I2H	20 mbar	LU

!	**WARNINGS:** After the adaption to another gas, the following is necessary: • • Apply the indelible sticker (supplied by the manufacturer) with the new gas setting on the technical plate. • • Replace the seals on the regulated parts (air bushing and pressure regulator cap). • • Check for the absence of gas leaks. • • Issue a signed copy of the technical intervention report indicating in detail the type of intervention carried out.

Check that the appliance is working properly, such as whether the burner arms are igniting regularly, its stability and the appearance of the flames. The sky blue/blue colour of the flame is a sign of correct combustion.

7. COMMISSIONING AND USING THE OVEN

7.1 DIAGRAM OF THE CONTROL PANEL

Control panel with a mechanical thermometer:

A) MAIN SWITCH
B) OVEN STANDBY SWITCH
C) MECHANICAL THERMOMETER
D) MECHANICAL THERMOSTAT
E) TEMPERATURE REACHED INDICATOR LIGHT
F) ALARM SWITCH-OFF INDICATOR LIGHT AND RESET BUTTON
G) CHAMBER LIGHT SWITCH

Notch	Temperature (°C)
0	0
1	80
2	100
3	150
4	200
5	250
6	280
7	300
8	350
9	400
10	450

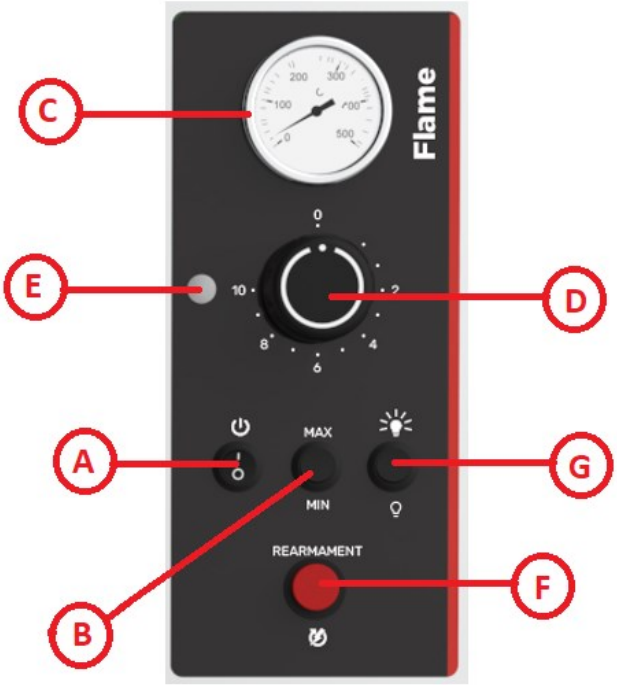

7.2 SWITCHING ON THE OVEN FOR THE FIRST TIME

!	**FOR A GOOD STARTUP OF THE OVEN, KEEP THE DOOR OPEN UNTIL THE THERMOMETER DOESN'T SHOWING 200° C**

When the equipment is used for the first time, it is advisable to heat the oven when empty to eliminate bad smells caused by the evaporation of the refractory stones and the inner metallic parts.

Procedure:

- Turn the main switch to “1” after checking that the oven is connected to the electric power supply;
- Let the (empty) oven operate for at least 8 hours at a temperature of 300°-350° before proceeding with the first batch.

7.3 START-UP PHASE

!	**FOR A GOOD STARTUP OF THE OVEN, KEEP THE DOOR OPEN UNTIL THE THERMOMETER DOESN'T SHOWING 200° C**

After connecting the oven to the electrical mains turn the main switch (A) to “1”. The digital thermometer display will show the average real temperature of the cooking chamber. At this point, turn the thermostat knob (D) to the desired temperature. This will start the oven, that is, the gas is ignited and the flame is produced.

!	**IF AFTER 3 START-UP ATTEMPTS, THE OVEN DOES NOT START, CHECK IN SEQUENCE:** • **that the main gas shut-off valve is open.** • **that the phase of the socket and the Schuko plug correspond; THE SCHUKO PLUG MAY BE INSERTED INCORRECTLY, TRY TO REVERSE THE POLARITY OF THE PLUG!!** • **if the flame detection electrode is well positioned and is touched by the flame.** • **if the solenoid valve is faulty.**

If no baking is being carried out, but you simply want to maintain the oven at temperature, leave the switch (B) in position 0 (min), which minimises gas consumption. If you want to start baking and therefore start the subsequent batches, turn the switch (B) to 1 (max), and keep this setting for the entire baking period.

7.4 GENERAL COOKING INSTRUCTIONS

Generally for the food products it is not possible to provide precise temperature and baking times because of their different characteristics.
Particularly, regarding pizza and similar products, time and temperatures depend on the shape and thickness of the dough, as well as the quantity and type of the additional ingredients.
For these reasons it is always advisable to initially carry out some baking tests, (particularly when this oven model is used for the first time), in order to better understand its characteristics and operation.

7.5 PIZZA MAKER TIPS

This chapter contains ideas and advice coming from a team of skilled pizza chefs who continuously collaborate in the development of our products.

For an optimal result, and therefore a good pizza, baking must be carried out at an average temperature of **380°C for approx. 3 ÷ 3.5 minutes.**
For easier oven use and care, for the best result, we strongly advise to proceed as follows:

1) The oven must be on (heating phase) for at least 30/40 minutes before using it and during this phase it must be set to the temperature desired for baking (approx. 380° is recommended)
2) At this stage proceed with the first batch keeping these settings
3) After baking the first pizzas (first batch) check the obtained result and if necessary further adjust the temperature settings

4) Proceed with the second and then with the subsequent batches, keeping these settings.
5) Once several batches are done, or in any case while the oven must simply remain in temperature (without any baking), turn the switch (B) to “0”. The oven will remain in standby until the switch (B) is returned to position “1” (before starting to bake again).

☞	For an optimal result, it is necessary that 20% of the baking surface (refractory stones) remains free. This solution allows the best elimination of the water vapours released by the pizzas when baking.

☞	For an optimal result it is better to always change the area occupied by the previous batch. This solution enables the refractory stone to dry correctly, creating a homogenous temperature in the entire area.

7.6 WORK PHASES

With the oven operating, the temperature parameters can be changed at any time; in addition, the pizza baking operation can be verified by turning on the light in the chamber.
Once the oven has reached the set temperature (seen on the display), the pizza(s) can be placed in the oven to be baked, proceeding as follows:

- Open the oven door using the handles;
- To turn on the light in the chamber, set the button (H) to “1”;
- Put the pizza(s) to be baked in the oven, using suitable instruments;
- Reclose the door using the handles and check the baking through the inspection window;
- When baking is complete, open the door using the handles and take out the pizza(s) using suitable instruments.

☞	When opening the door while the oven is on, it is important to stay at a correct distance, to avoid the flash of heat that will exit the chamber.

☞	Use suitable instruments to position and move the pizzas in the baking chamber, to avoid burns.

☞	When opening the door to insert the pizza(s), do not leave it opened for a long time, to avoid heat dispersion, which would cause the chamber temperature to drop.

☞	Keep oil and fats from dripping onto the bottom, as they could burn at high temperatures.

7.7 SWITCH-OFF PHASE

To shut down the oven, turn the thermostat knob (D) to 0, then set the main switch (A) to 0.

8. MAINTENANCE AND CLEANING

8.1 SAFETY PRECAUTIONS

!	Before performing any maintenance operations take the following precautions:

- Make sure that the oven is turn off and completely cooled down;
- Make sure that the gas supply has been shut off (system shut-off cock closed)
- Make sure that the oven is not electrically powered;
- Make sure that the electrical power cannot be accidentally reactivated. Disconnect the plug from the socket;
- Use individual devices in compliance with the directive 89/391/EEC;

- Always use appropriate maintenance tools;
- Once maintenance and repairs are finished, before restarting the oven, reinstall all of the protections and reactivate all of the safety devices.

8.2 ROUTINE MAINTENANCE TO BE PERFORMED BY THE USER

As with any equipment also our ovens require simple, frequent and careful cleaning to ensure efficient, regular functioning.

!	It is recommended to never use chemical products which are not specific for food preparation areas, abrasives or corrosives for any reason. Do not use water jets, tools, rough or abrasive instruments, such as steel wool, brillo sponges or any other item that could damage the surface of the machine, and especially those that could compromise health safety.

8.2.1 Cleaning the refractory surface of the cooking chamber

Cleaning operations must be carried out at the end of each use in compliance with the hygiene standards and to protect the machine's functionality. Before proceeding, heat the oven to a temperature of 450°C for approximately 20 minutes to promote the carbonisation of the cooking residue. When the temperature has been reached, turn the oven off and wait for the temperature to drop to around 60°C (the best temperature for cleaning). At this point, disconnect the power supply. After you have put on gloves and suitable clothing to protect yourself from burns, open the door and use a long-handled natural fibre brush to firstly remove the cooking residues from the refractory surface. Afterwards, remove the remaining residue with a suitable vacuum cleaner.
When you have finished, wipe down the refractory surface with a damp cloth.

8.2.2 Externally cleaning the oven

The cleaning of the external oven surface, the external parts in stainless steel, the inspection window and the control panel must be done with the oven cold and with the electric power supply disconnected.
Use a sponge or a non-abrasive soft cloth slightly moistened with water or possibly with a non-corrosive neutral detergent. In any case, do not use water jets that can penetrate the electric parts, damaging them seriously and causing a possible hazard for people.

8.3 UNPLANNED MAINTENANCE TO BE PERFORMED BY TECHNICIANS

☞	Any operation indicated in this chapter is not the responsibility of the user, who must not in any way carry out the operations, measurements and adjustments indicated here. Any operation carried out by unauthorized personnel will be considered tampering with the product and therefore the responsibility for any malfunctions, or worse for accidents and/or damage, will fall on the person who carried out such operations. Interventions, tampering or modifications not expressly authorized that do not comply with what is stated in this manual may cause damage, injuries or fatal accidents and will void the warranty.

The technician is required to only use original spare parts, for which reference must be made to the list in chapter **EXPLODED VIEW and SPARE PARTS LIST**.

!	For the replacement of each component, refer to the list in chapter 10 (EXPLODED SPARE PARTS VIEW). Electrically disconnect the oven and turn off the gas supply before performing any operation on the oven.

9. ALARMS AND POSSIBLE ANOMALIES

MALFUNCTIONS		
Anomaly	**Possible Cause**	**Solution**
The oven does not switch on and the digital thermometer display (where present) is off.	No electricity in the mains.	Check the main contactor, socket, plug and power cable.
	The main switch is off (positioned to “0”).	Turn the main switch to position “1”.
	The safety thermostat has cut in.	When the oven is cold, reset the safety thermostat by pressing the red button located on the thermostat body.
The display is off even though the main switch is in position “1” and there is power.	The digital thermometer is faulty.	Replace the digital thermometer.
The digital thermometer display is showing “PF”.	The temperature probe is faulty.	Replace the probe.
The digital thermometer display is showing “or”.	Temperature reading limit. The control thermostat is likely to be faulty.	Check that the thermostat and thermometer are working. Replace the faulty component.
The internal lighting lamp does not light up.	There is no power supply to the lamp.	Check the electrical connection.
	The lamp switch is faulty.	Replace the lamp switch.
	The transformer is faulty.	Replace the transformer.
	The lamp has burnt out.	Replace the lamp.
The cooking chamber does not heat up properly.	The set temperatures are too low.	Correctly set the temperatures.
The temperature continues to rise beyond the settings made via the thermostats.	The thermostat probe or thermostat contacts are faulty.	Check and replace the thermostat if necessary.
The burner does not light up and the red gas reset button on the control panel lights up.	No gas or insufficient pressure.	Measure the inlet and outlet valve pressure.
	Ineffective electrode discharge ignition.	Check the position of the two electrodes and the condition of the electrical connection cables.
	The electric cable’s Schuko plug has been inserted the wrong way around.	Turn the plug the other way around and plug it in.
The burner ignites but only remains lit for a few seconds.	The detection electrode has not been positioned correctly.	Check that the detection electrode has been positioned correctly and more importantly, that the flame touches it.
The burner flame is too yellow.	The distance of the primary air bush is incorrect.	Reposition the bush at the correct distance according to the data in the table.

10. INFORMATION FOR DEMOLITION AND DISPOSAL

The demolition and disposal of the machine are the sole responsibility and responsibility of the owner who must act in compliance with the laws in force in his country concerning safety, respect and protection of the environment. Dismantling and disposal may also be entrusted to third parties, provided that recourse is always made to companies authorized to recover and eliminate the materials in question.

☞	Always comply with the regulations in force in the country where you work to dispose of the materials and possibly to report the disposal.

!	All dismantling operations for demolition must be carried out with the machine switched off and the electrical power supplied.

- Remove all the electrical equipment;
- Separate the accumulators present in the electronic boards;
- Scrap the machine structure through authorized companies.

!	The abandonment of the machine in accessible areas is a serious danger to people, things and animals. The responsibility for any damage to people and animals always falls on the owner.

INFORMATION TO USERS

According to Art. 13 of the Leg. Decree No.151 of 25 July 2005 "Implementation of Directives 2002/95/CE, 2002/96/CE, 2003/108/CE regarding the restriction of the use of certain hazardous substances in electrical and electronic equipment and also in waste disposal".

The crossed out wheeled bin symbol displayed on the equipment or its packaging indicates that the product, at the end of its useful life, must be collected separately from other wastes.

The collection of this apparatus at the end of its technical life is organized and managed by the manufacturer. The user that intends to dispose off this equipment should, therefore, contact the manufacturer and follow the system he has adopted to allow separate collection of the equipment that has reached the end of its life.
Proper waste sorting for the subsequent recycling, treatment and environmental disposal of decommissioned equipment contributes to preventing potentially negative impact on the environment and on human health, encouraging the reuse and/or recycling of the materials composing the equipment. If the holder of this product disposes of it illegally, this involves the application of administrative sanctions provided by the laws in force.

Registered. Member. WEEE National Register under the number:
IT08020000000645